3.4 Clutch B

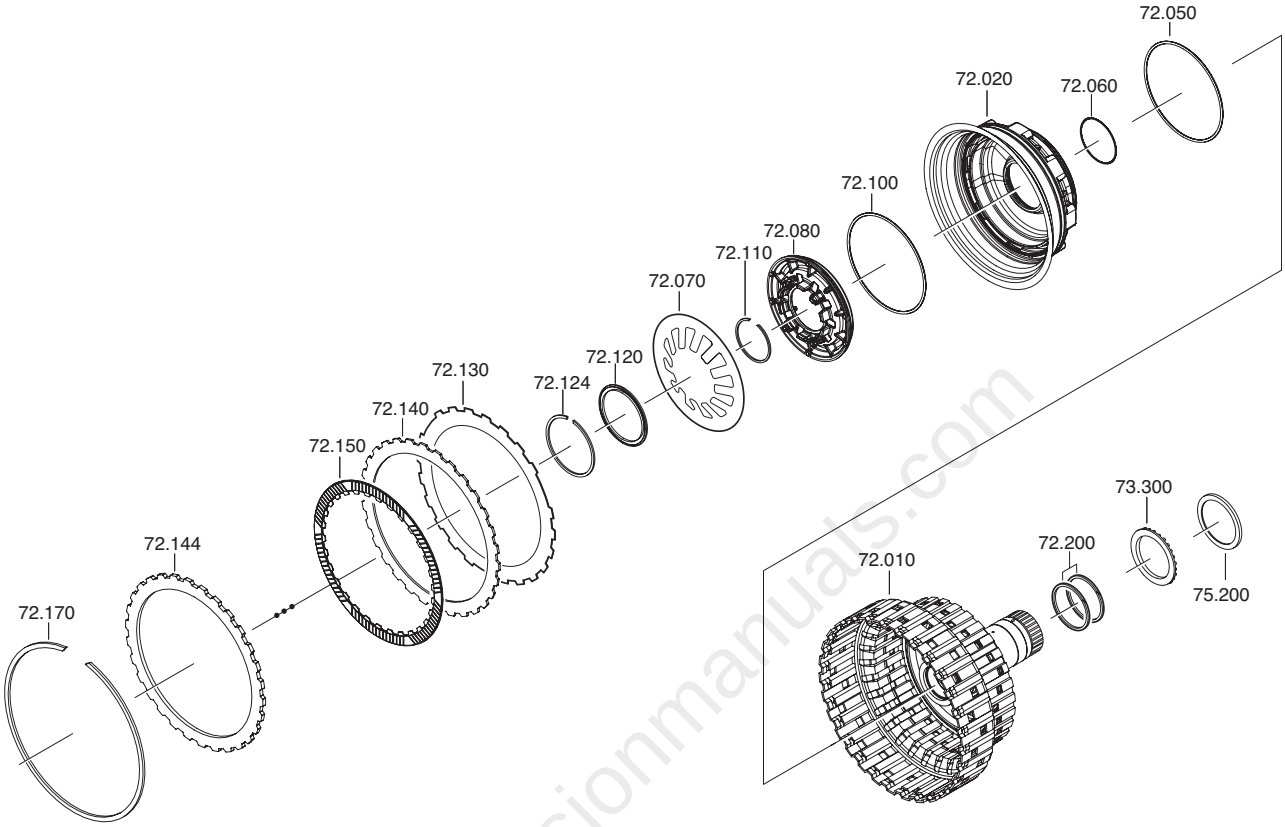

Transmissionmanuals.com

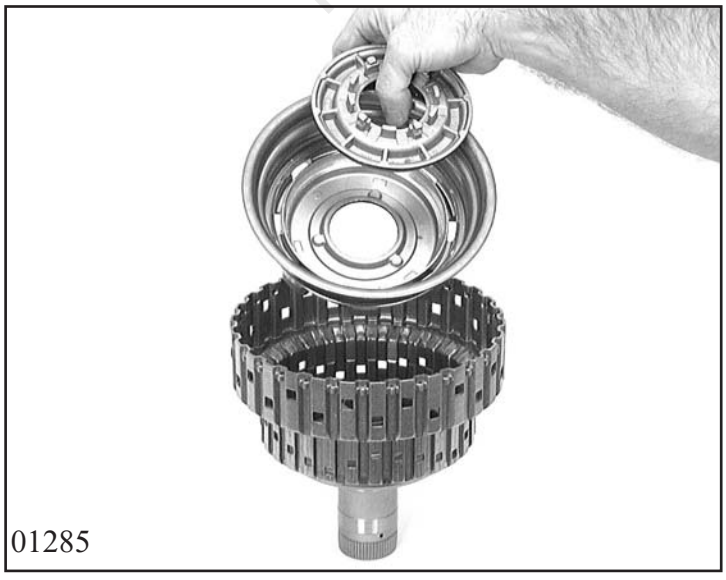

Install new O-ring seals 72.050 and 72.060 on piston B 72.020.
Press piston into cylinder B 72.010.
Pull O-ring seal 72.100 onto baffle plate 72.080 and press this into the piston.

Press down the baffle plate and secure with snap ring 72.110.
Insert cup spring B 72.070 and retaining ring 72.120 with groove facing upwards press cup spring down in the mandrel press with assembly hoop 5x46 002 566 and secure with snap ring 72.124.

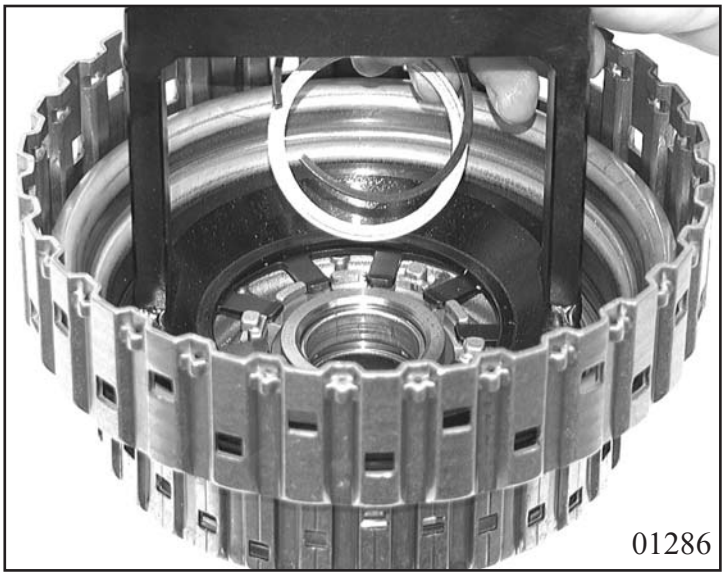

Insert complete clutch pack B, starting with spring disk 72.130. Then insert outer disk 72.140 and lined disk 72.150 alternately.
Secure the last outer disk 72.144 with snap ring 72.170.

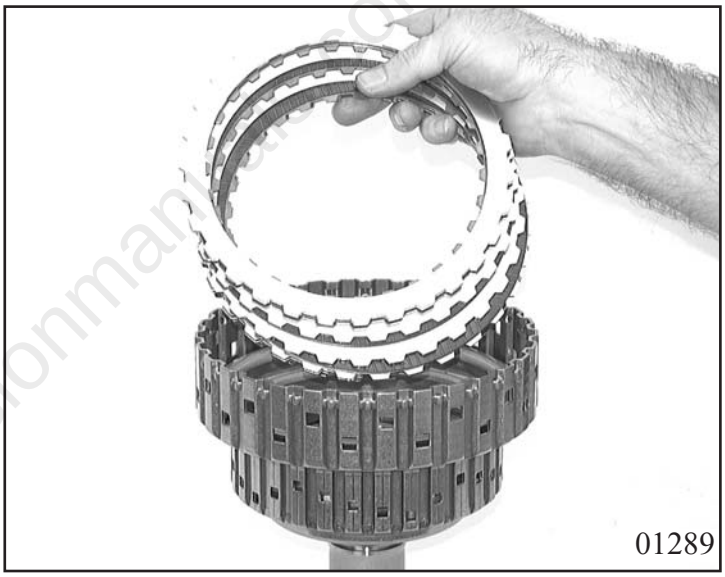

Warning!
For adjusting work see **Chapter 1.4.3**

Turn the cylinder and pull 2 rectangular-section rings 72.200 onto cylinder B.
Clip bearing 73.300 onto cylinder B.

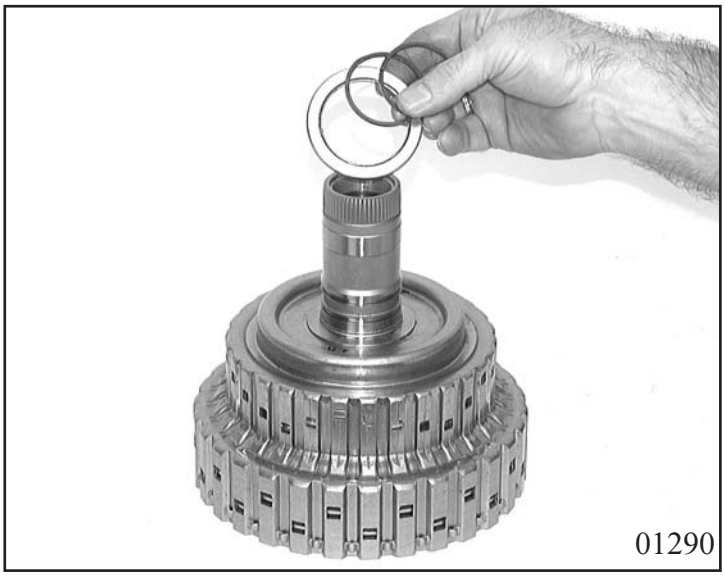

Warning!
Secure new rectangular-section rings in the groove with Vaseline.

Transmissionmanuals.com

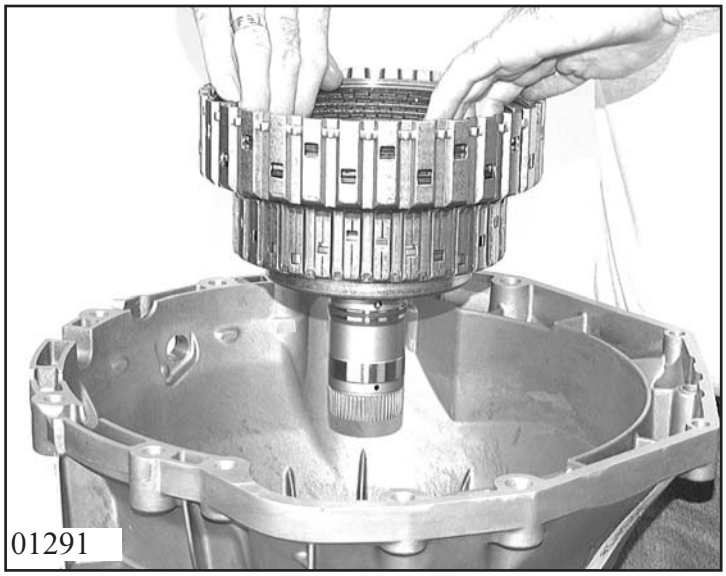

Insert angular disk 75.200 and also complete clutch B into transmission housing.

Transmissionmanuals.com